HF-30S1

HF-30S1

ZENITH®

SERVICE MANUAL

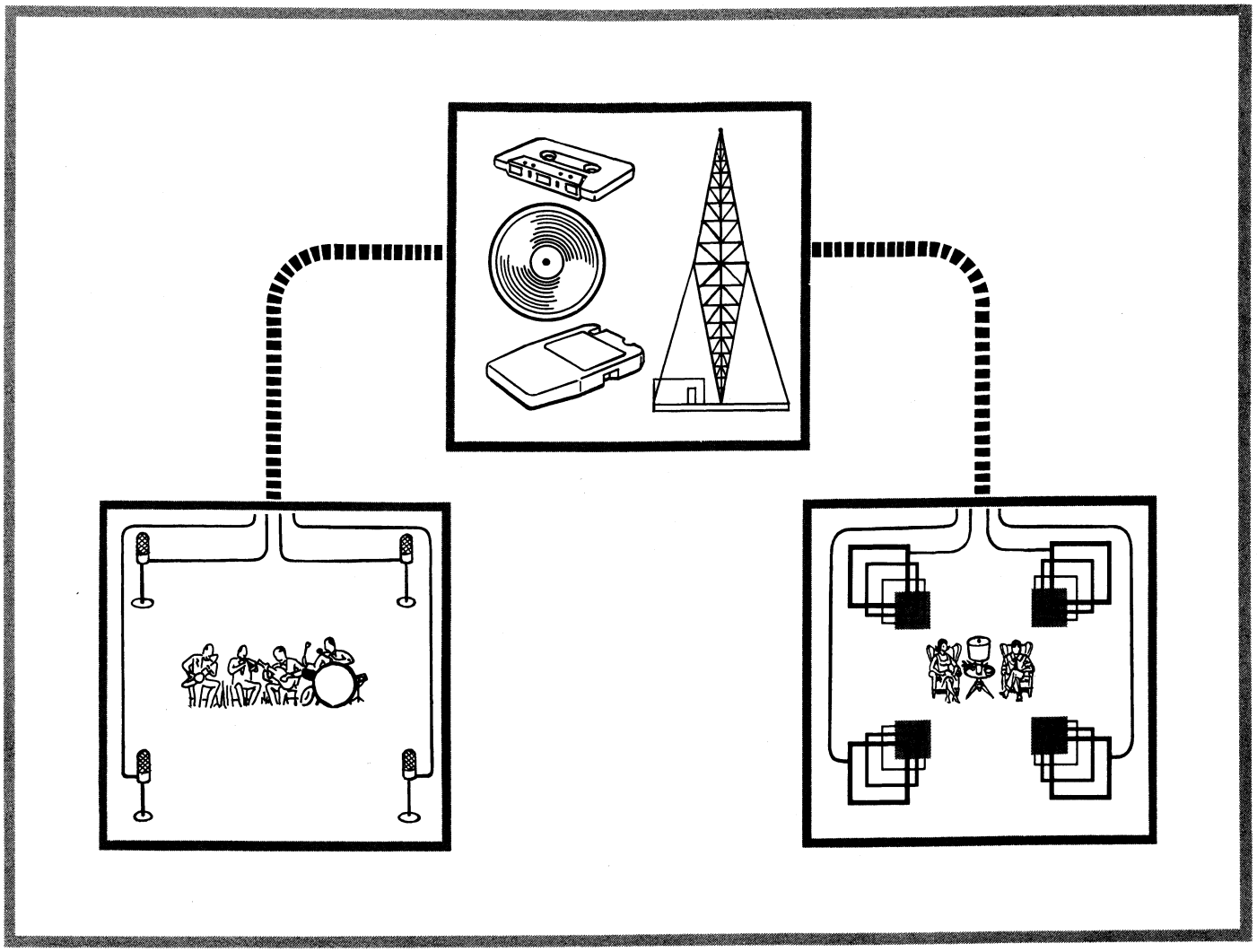

HIGH FIDELITY AND STEREO FM MODELS

ZENITH RADIO CORPORATION

1900 N. AUSTIN AVENUE CHICAGO, ILLINOIS 60639

HF 30S1
27M – RR

PRINTED IN U.S.A.
MAY, 1975

PART NO. 923-841
$1.50

To the Service Technician

PRODUCT SAFETY SERVICING GUIDELINES FOR ALL AUDIO AMPLIFIERS AND RADIO RECEIVERS

CAUTION: No modification of the circuit should be attempted. Service work should be performed only after you are thoroughly familiar with all of the following precautions. To do otherwise increases the risk of potential hazards and injury to the user.

SAFETY CHECKS

SUBJECT: Fire & Shock Hazard

1. Be sure that all components are positioned in such a way to avoid possibility of adjacent components shorts. This is especially important on those chassis which are transported to and from the repair shop.

2. Always replace all protective devices such as insulators and barriers after working on a set.

3. Check for frayed insulation on wires including the AC cord.

4. Check across-the-line components for damage and replace if necessary.

5. After re-assembly of the set always perform an AC leakage test on the exposed metallic parts of the cabinet such as the knobs, antenna terminals, etc. to be sure the set is safe to operate without danger of electrical shock. Do not use a line isolation transformer during this test. Use an AC voltmeter having 5000 ohms per volt or more sensitivity in the following manner: Connect a 1500 ohm 10 watt resistor, paralleled by .15 mfd. AC type capacitor, between a known good earth ground (water pipe, conduit, etc.) and the exposed metallic parts, one at a time. Measure the AC voltage across the combination 1500 ohm resistor and .15 mfd. capacitor. Reverse the AC plug on the set and repeat AC voltage measurements again for each exposed metallic part. Voltage measured must not exceed .3 volts RMS. This corresponds to 0.2 milliamp AC.

Any value exceeding this limit constitutes a potential shock hazard and must be corrected immediately.

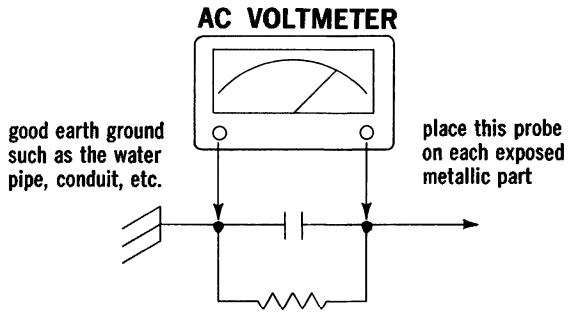

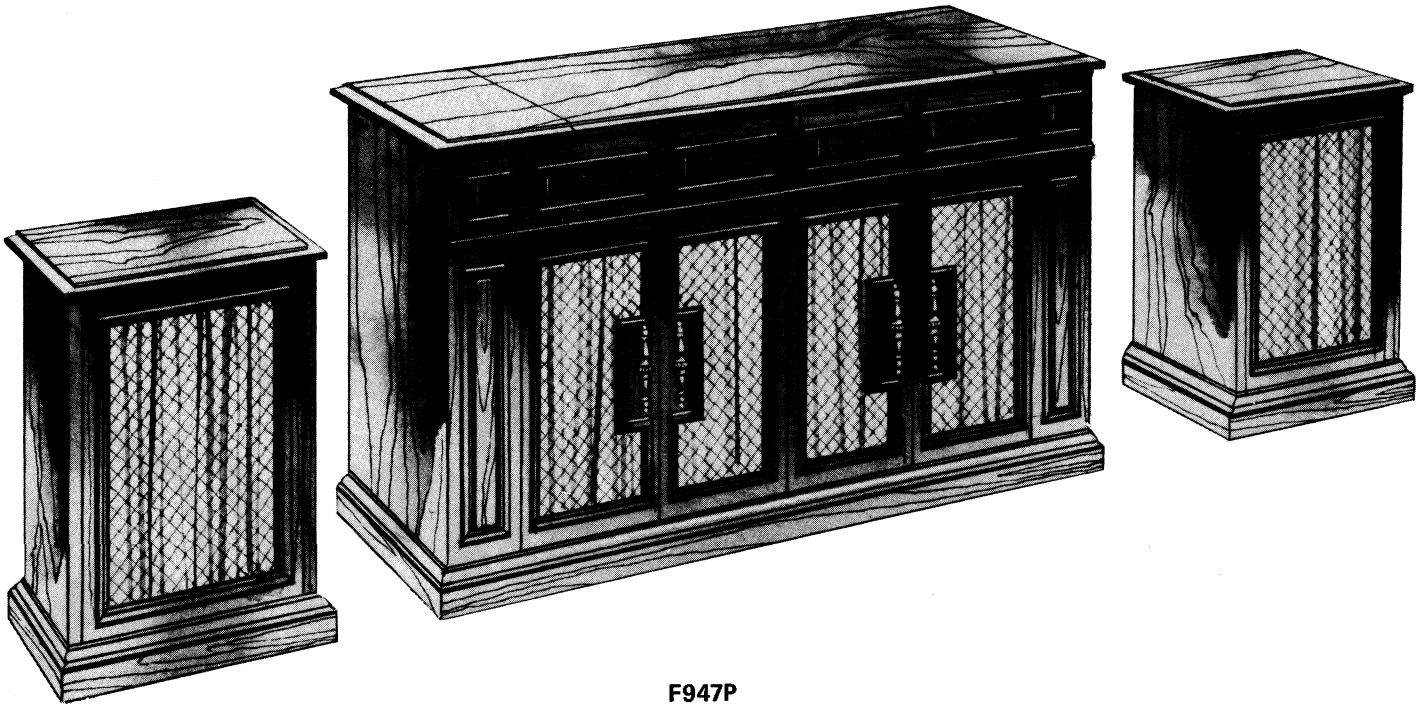

F947P

REPRESENTATIVE MODEL ILLUSTRATION

INDEX

CHASSIS OR MODEL	INFORMATION PAGE	PRIOR DATA IS ALSO CONTAINED IN
1WDA10	–	HF 26
1WDA10Z1	–	HF 28
1WEA10 (Z1)	–	HF 28S1, 29, 30
1WEA11 (Z1)	–	HF 28S1, 29, 30
3WEA10 (Z1)	–	HF 29, 29S2, 30
3AT20	–	HF 18S1, 18S2, 19, 21, 26
3AT20Z1	–	HF 28, 29
3AT20Z2	–	HF 29
4WDR50X	–	HF 25, 26
4WDR50X (X1)	–	HF 26
5WDR50X (X1)	–	HF 26, 30
5WER50	6	HF 28S1, 29, 29S1, 30
5WFR50	6, 9	HF 30
5WER51	9	HF 29, 29S1, 30
5WFR51	10	HF 30
5WER52	4, 10	HF 29S2, 30
5WER52Z1	4, 10	HF 30
5WER52Z2	4, 10	HF 30
5WER52Z3	4, 10	HF 30
5WER53	–	HF 30
5WFR53	11	HF 30
6AT24	11	HF 18, 19, 22, 26, 27, 29, 30
10AT26	–	HF 18S2, 20, 22
15WCA10	–	HF 23, 24, 27
15WEA10	–	HF 29S1, 30
15WDR50Z1	–	HF 25, 26, 29
15WDR51	–	HF 26, 27, 29, 30
15WFR51	11	HF 30
15WER55	12	HF 29, 29S1, 29S2, 30
15WFR55	5, 8, 12, 13	HF 30
15WER56	–	HF 29, 29S1, 29S2, 30
15WFR57	13	HF 30
16CT21	–	HF 22, 25, 26
21BT34	–	HF 19, 20, 21, 22, 23
21BT34Z1	–	HF 22, 23
25BT22	–	HF 19, 23
25WDA10	–	HF 27, 28, 30
25WDR50	–	HF 26, 27
25WDR50Z1	–	HF 27
27BT30	–	HF 19, 21, 22
29CT20	–	HF 22, 24
29CT21	–	HF 22, 24
29CT21Z1	–	HF 24
29CT21Z2	–	HF 26, 27
29AT24	–	HF 18, 19, 22
29AT24Z1	–	HF 22
29AT24Z2	–	HF 26, 29, 30
29CT30	–	HF 22, 23, 24
35WDR50	–	HF 26, 28, 29
35WDR50Z1	–	HF 29, 29S1, 30
35WFR50	7, 14, 15	HF 30
E543W (1)	–	HF 29, 29S1
B545W	–	HF 21, 23, 24
D546W (1)	–	HF 26, 28
B553W	–	HF 21, 22, 24
D554W (1)	–	HF 26, 28
D556W (1)	–	HF 26, 28
D583W (1)	–	HF 26
D742W (1)	–	HF 26, 28
E743W (1)	–	HF 29S1
D9011W	–	HF 26, 29, 29S1
E9012W	–	HF 29S1, 30
E9012W1	–	HF 29S1, 30
D9013W	–	HF 26, 28
E9014W (W1)	–	HF 29S1, 30
E9014X (X1)	–	HF 29S1, 30
C9015W	–	HF 24, 25
C9016W	–	HF 24, 25
D9016W	–	HF 29, 29S1
S9017W (1)	–	HF 18, 22, 27
S9012W2	–	HF 27
E9018W (W1)	–	HF 29S1, 30
E9029W	–	HF 29S1
E9026W	15	–
S-82931	–	HF 18S1, 19, 23
S-83179	–	HF 18, 18S1, 19, 22, 26, 29, 30
Speaker	4	–
Wiring	Thru	
Schematics	8	

HF 18 is Part No. 923-558
HF 18S1 is Part No. 923-576
HF 18S2 is Part No. 923-592
HF 19 is Part No. 923-606
HF 20 is Part No. 923-610
HF 21 is Part No. 923-626
HF 22 is Part No. 923-642
HF 23 is Part No. 923-646
HF 24 is Part No. 923-653
HF 25 is Part No. 923-669
HF 26 is Part No. 923-702
HF 27 is Part No. 923-707
HF 28 is Part No. 923-718
HF 28S1 is Part No. 923-734
HF 29 is Part No. 923-740
HF 29S1 is Part No. 923-762
HF 29S2 is Part No. 923-784
HF 30 is Part No. 923-809

Solid State Device Theory and Circuit Applications are found in the following Service Manuals:

HF 18: Theory – Diodes (Including Zener and SCR), Transistors, (PNP, NPN, Darlington, and JFET). Applications – Chassis 29AT24 (JFET FM-RF, Multiplex, Electronic Touch Switching), Complementary Symmetry, Chassis 11ZT27 (Electronic Filter).

HF 22: Theory – JFET, IGFET, MOSFET, Applications – Dual Gate MOSFET FM-RF, JFET Biplex Detector, Quasi-Complementary Symmetry.

HF 23: Applications – Model C9029/Chassis 15WCA10 Four Channel Decoder.

HF 26: Applications – Chassis 15WDR51 (JFET Meter Circuit, Multiplex IC, Four Channel Decoding).

HF 27: Applications – Model SD2568 Speaker Switching Circuitry.

HF 28: Applications – Model D9013W Allegro Speaker System.

HF 29: Theory – Light Emitting Diodes (LED), Applications – Three Light Tuning (Target Tuning), Multiplex IC.

HF 29S1: Applications – Snap-off Escutcheon and Out Front Chassis Removal, "E" Line Models.

HF 30: Applications – Snap-off Escutcheon and Out Front Chassis Removal, "F" Line Models.

PRODUCT FEATURES

SEE NOTES ON PAGE 4

CABINET			CHASSIS		SPEAKERS			RECORD CHANGER	OTHER FEATURES		
MODEL	COLOR	STYLE NOTE A	MODEL	TYPE	PART NUMBER	IMPED. (In Ohms)	QTY. AND SIZE In Inches)	PART NUMBER	TAPE PROVISION NOTE B	SPEAKER PROVISION NOTE C	MISC. NOTE D
EX541L	Beige	P,H,DS	1WEA11	Phono Only	49-1247	16	2-4x6	169-470	–	–	–
EX584W	Walnut	M,LL	5WFR51	FM/AM/Phono	49-1168 49-1249	8 8	2-3½ 2-6½	169-528	TM	2+2, A1	A1, DGL, H
EX585J1	Brown	M,LL	15WER56	FM/AM/Phono	49-1168 49-1254	8 16	2-3½ 2-8	169-478	TM	2+2, A2, A3	A2, DGL, H, TT
FX585W	Walnut	M,LL	15WFR57	FM/AM/Phono	49-1168 49-1254	8 16	2-3½ 2-8	169-528	TM	2+2, A2, A3	A2, DGL, F, H, TT
FX586X	White	M,LL	15WFR57	FM/AM/Phono	49-1168 49-1254	8 16	2-3½ 2-8	169-528	TM	2+2, A2, A3	A2, DGL, F, H, TT
F587W1	Walnut	M,LL	5WER51	FM/AM/Phono/ Tape	49-1168 49-1249	8 8	2-3½ 2-6½	169-484	169-492 8TK-P	2+2, A1	A1, DGL, H
FX588W	Walnut	M,LL	5WFR51	FM/AM/Phono/ Tape	49-1168 49-1249	8 8	2-3½ 2-6½	169-528	169-494-01 Cass-R/P	2+2, A1	A1, DGL, H
F588W1	Walnut	M,LL	5WFR51	FM/AM/Phono/ Tape	49-1168 49-1249	8 8	2-3½ 2-6½	169-478	169-494-01 Cass-R/P	2+2, A1	A1, DGL, H
F588W2	Walnut	M,LL	5WFR51	FM/AM/Phono/ Tape	49-1168 49-1249	8 8	2-3½ 2-6½	169-484	169-494-01 Cass-R/P	2+2, A1	A1, DGL, H
F589X	White	M,LL	15WFR57	FM/AM/Phono/ Tape	49-1168 49-1240	8 16	2-3½ 2-10	169-496	169-489 8TK-P	2+2, A2, A3	A3, DGL, F, H, TT
F736W3	Walnut	M,LL	5WER52Z3 OR 5WER52Z2	FM/AM/Phono/ Tape	49-1168 49-1249	8 8	4-3½ 4-6½	169-483	169-471 8TK-P	–	A1, DGL, HH
F902W2	Walnut	C,LL	5WER50	FM/AM/Phono/ Tape	49-1094 49-1224-01	45 8	2-3½ 2-6x9	169-461	169-464 8TK-P	2+2, A1	H
F902W51	Walnut	C,LL	5WFR50	FM/AM/Phono/ Tape	49-1094 49-1224-01	45 8	2-3½ 2-6x9	169-502	169-490 8TK-P	2+2, A1	H
E904DE2	Dark Oak	C,LL	5WER50	FM/AM/Phono	49-1094 49-1224-01	45 8	2-3½ 2-6x9	169-461	–	2+2, A1	H
ET915DE1	Dark Oak	C,LL	15WER55	FM/AM/Phono/ Tape	49-1166 49-1221	8 16	2-3½ 2-10	169-478	169-464 8TK-P	2+2, A2, A3	A, H, T
ET931W	Walnut	C,LL	35WFR50	FM/AM/Phono/ Tape	49-1094 49-1166 49-1217	45 8 8	2-3½ 2-3½ 2-10	169-467	D631 8TK-P	2+2, A2, A3	A, H, T
F966DE F966P	Dark Oak Pecan	C,LL	6AT24/ 29AT24Z2	FM/AM/Phono	49-1073 49-1094 49-1166	8 45 8	2-15 4-3½ 2-3½	169-468	TM	2+2, A1 A2, A3	A, H
E9018X1	White	M, SP	–	–	49-1168 49-1240	8 16	2-3½ 2-10	–	–	–	A3

PRODUCT FEATURES

RECORD CHANGER FEATURES

Part No.	Mfg. Code	Stylus Pressure - Grams-	Cartridge & Stylus	45 RPM Adapter	Turntable		Record Size/ Selector	Record Stack Capacity	Base-Plate Color	Turntable Pad Color	Pressure Arm Color	Misc. Features
					Speeds RPM	Diameter Inches						
169-420	VM 1293	2-2.9	142-167 D-S S-82621	S-82965	16, 33, 45, 78	11"	7, 10, 12 Auto	1/2"	Dark Brown	Light Beige	Brown	Cue Slide
169-461	BSR C129R	2-2.9	142-167 D-S S-82621	S-72648 Or S-72910	33, 45, 78	10-1/8"	7, 10, 12 Manual	1/2"	Black	Light Gray	Black	—
169-462	BSR C129	4-6	142-179 D-S 56-629	S-72648 Or S-72910	33, 45, 78	10-1/8"	7, 10, 12 Manual	1/2"	Black	Light Gray	Black	16.5 VAC Overwind
169-466	VM 1272	2-2.9	142-167 D-S S-82621	S-82964	16, 33, 45, 78	11"	7, 12 Auto 10 Manual	1/2"	Black	Black	Black	Cue Lever
169-468	VM 1272	2-2.9	142-167 D-S S-82621	S-82964	16, 33, 45, 78	11"	7, 12 Auto 10 Manual	1/2"	Black	Black	Black/ Chrome	Cue Slide
169-470	BSR C129R	2-2.9	142-167 D-S S-82621	S-72648 Or S-72910	33, 45, 78	10-1/8"	7, 10, 12 Manual	1/2"	Black	Light Gray	Black	—
169-475	BSR C129	2-2.9	142-167 D-S S-82621	S-72648 Or S-72910	33, 45, 78	10-1/8"	7, 10, 12 Manual	1/2"	Black	Light Gray	Black	—
169-476	BSR C129	4-6	142-179 D-S 56-629	S-72648 Or S-72910	16, 33, 45, 78	10-1/8"	7, 10, 12 Manual	1/2"	Black	Black	Black	16.5 VAC Overwind
169-477	BSR C134/C135	4-6	142-179 D-S 56-629	S-72910	33, 45, 78	10-1/8"	7, 10, 12 Manual	1/2"	Beige	Black	Black	16.5 VAC Overwind
169-477-01	BSR C134/C135	4-6	142-181 D-S 56-629	S-71910	33, 45, 78	10-1/8"	7, 10, 12 Manual	1/2"	Beige	Black	Black	—
169-478	BSR	2-2.9	142-167 D-S S-82621	S-72910	33, 45, 78	10-1/8"	7, 10, 12 Manual	1/2"	Black	Black	Black	Cue Lever Anti-Skate
169-479	BSR C141R	2-2.9	142-167 D-S S-82621	S-72910	33, 45, 78	10-1/8"	7, 10, 12 Manual	1/2"	Black	Silver Gray	Black	Cue Lever Anti-Skate
169-483	BSR C123R1	2-2.9	142-167 D-S S-82621	S-72910	33, 45, 78	10-1/8"	7, 10, 12 Manual	1/2"	Black	Black	Black/ Chrome	Cue Lever Anti-Skate
169-484	BSR	2-2.9	142-167 D-S S-82621	S-72910	33, 45, 78	10-1/8"	7, 10, 12 Manual	1/2"	Black	Black	Black/ Chrome	Cue Lever
169-496	BSR	2-2.9	142-167 D-S S-82621	S-72910	33, 45, 78	10-1/8"	7, 10, 12 Manual	1/2"	Black	Black	Black/ Chrome	Cue Lever Anti-Skate
169-497	VM 1272	2-2.9	142-167 D-S S-82621	S-82964	16, 33, 45, 78	11"	7, 10, 12, M Manual	1/2"	Black	Black	Black	Cue Lever
169-502	VM 1272	2-2.9	142-167 D-S S-82621	S-82964	16, 33, 45 78	11"	7, 10, 12, M Manual	1/2"	Black	Black	Black	Cue Lever
169-528	BSR C123R1	2-2.9	142-167 D-S S-82621	S-72910	33, 45, 78	10-1/8"	7, 10, 12 Manual	1/2"	Black	Black	Black/ Chrome	Cue Lever Anti-Skate 50 Hertz

NOTE: All record changers have 120VAC motors. See "Misc Features" for those with overwinds. D = Diamond, S = Manufactured Sapphire.

PRODUCT FEATURES
NOTES

NOTE A – CABINET STYLE:
C = Console, 3C = Three Piece Console, M = Modular, P = Portable, H = Handle, DS = Detachable Speaker Enclosure, LL = Lift Lid, 2LL = Two Lift Lids, RL = Removable Lid, SP = Speaker System.

NOTE B – TAPE INPUT AND OUTPUT PROVISION:
Factory Installed: 8TK = Eight Track Cartridge,
Cass = Cassette, P = Play, R = Record.
TM = Top of Set Model for installation with the designated console or modular models:
Model F635 - Cartridge Tape Player.
Model E637 - Cassette Tape Player/Recorder.
Model F638 - Cartridge Tape Player/Recorder.
Model D762 - Cartridge Tape Player.

NOTE C – SPEAKER PROVISIONS:
2+2 = Speaker Matrix or Conventional Stereo Extension Speaker System Provisions.
A1 = Model E9012W Allegro 1000 Speaker System may be used.
A2 = Model E9014W Allegro 2000 Speaker System may be used.
A3 = Model E9018W Allegro 3000 Speaker System may be used.

NOTE D – MISCELLANEOUS FEATURES:
A = Speaker System is Allegro.
A1 = Speaker System is Allegro 1000.
A2 = Speaker System is Allegro 2000.
A3 = Speaker System is Allegro 3000.
AUX = Auxiliary input accepts Record Changer Model E9026W or Tape Units listed under Note B.
DGL = Digilite Dial Scale.
F = Flywheel Tuning.
H = Headphone Jack (Stereo).
HH = Headphone Jack (Four Channel).
PL = Power Indicator Light.
RS = Record Storage
T = Tuning Meter.
TT = Target Tuning (Three Light) Indicator.

MODELS: E712W, E736W
F712W, F736W
F712W1, F736W2
F712W2, F736W11

NOTE: ⊘ INDICATES WHITE OR YELLOW VOICE COIL POLARITY IDENTIFICATION DOT ON SPEAKER

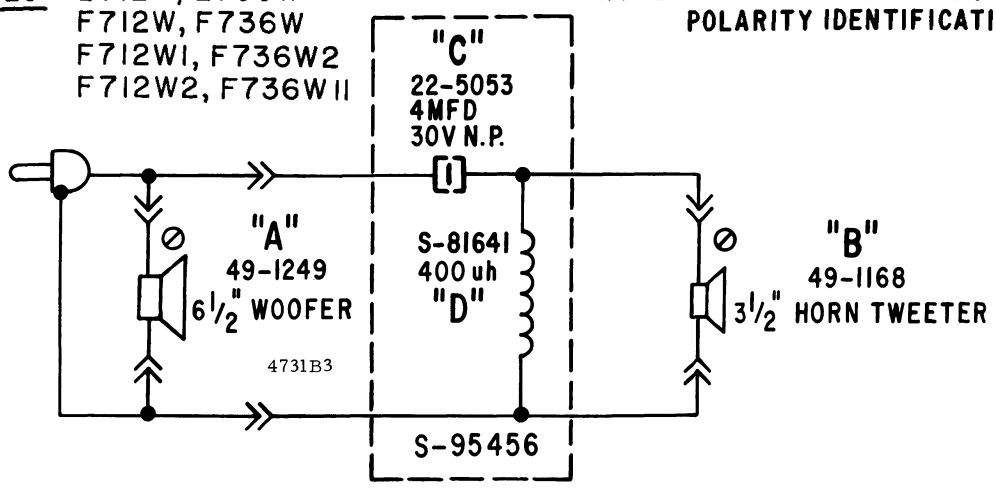

SPEAKERS				
	RIGHT FRONT	LEFT FRONT	RIGHT REAR	LEFT REAR
A	LS401	LS451	LS801	LS851
B	LS402	LS452	LS802	LS852
C	C418	C468	C818	C868
D	L401	L451	L801	L851

SPEAKER WIRING SCHEMATICS

E902W, E903M, E904DE, E903M2, E904DE2,
ET902W, ET903M, ET904DE, ET903M2, ET904DE2,
F902W1, F902W2

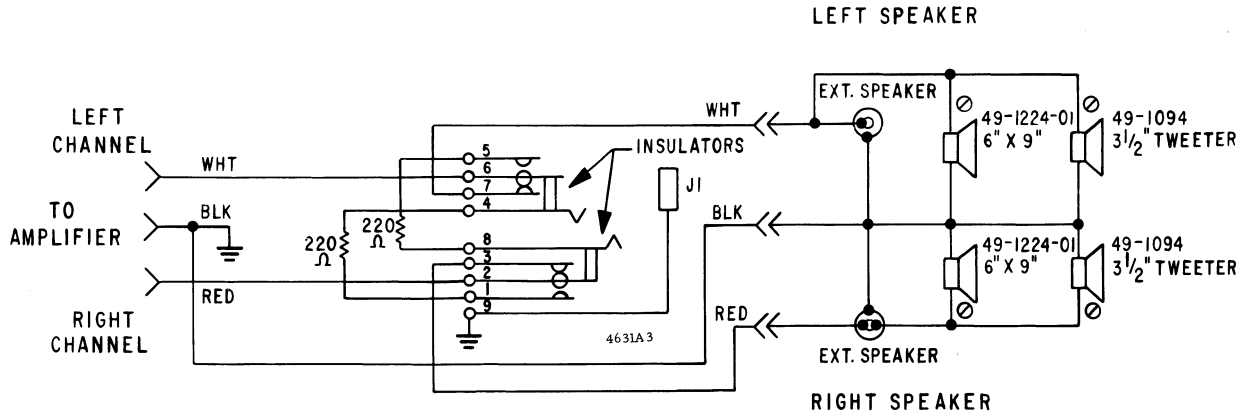

NOTE:
⊘ INDICATES WHITE OR YELLOW VOICE COIL POLARITY IDENTIFICATION DOT ON SPEAKER.

F902W, F903M, F904DE, F904P

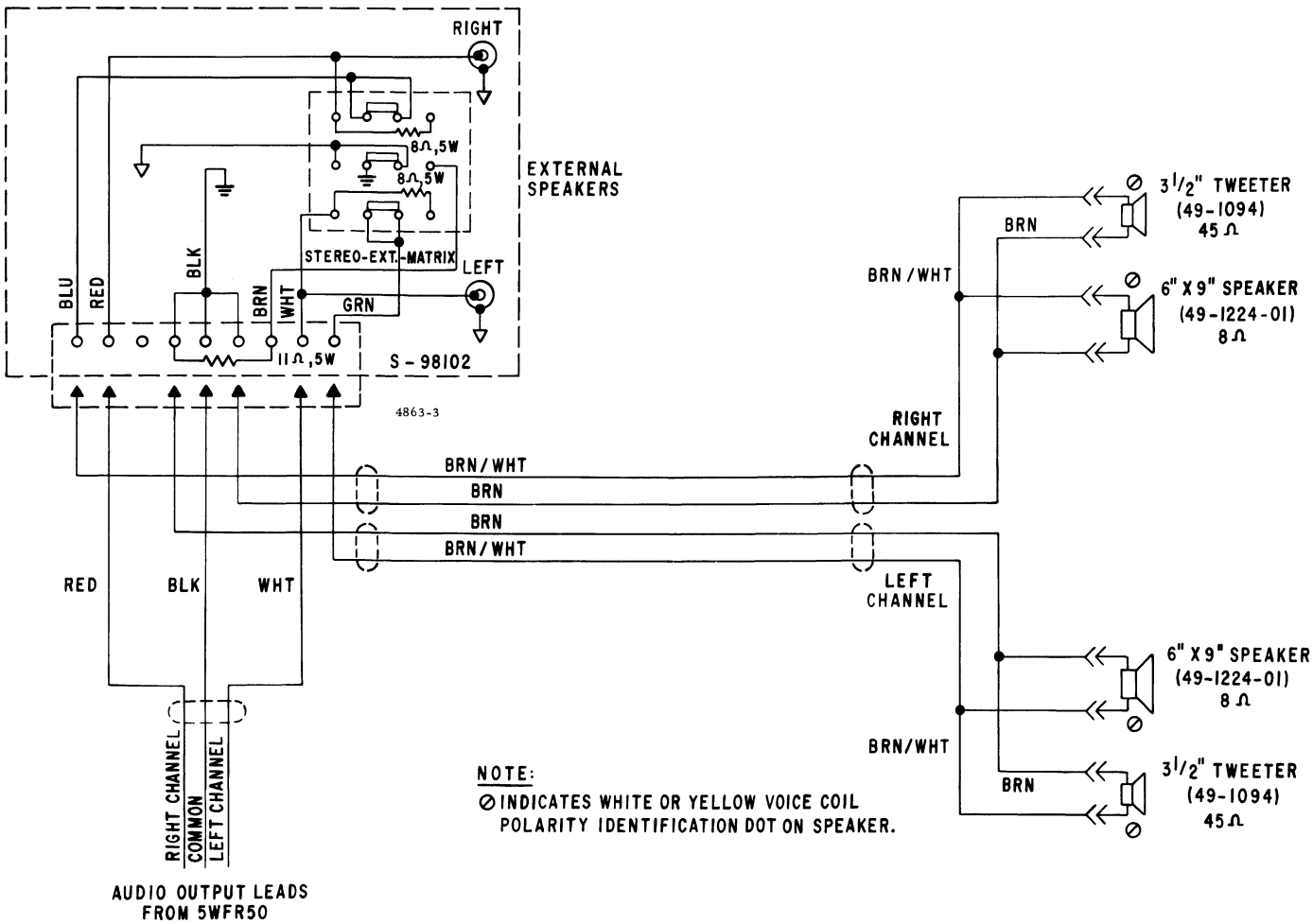

NOTE:
⊘ INDICATES WHITE OR YELLOW VOICE COIL POLARITY IDENTIFICATION DOT ON SPEAKER.

SPEAKER WIRING SCHEMATICS

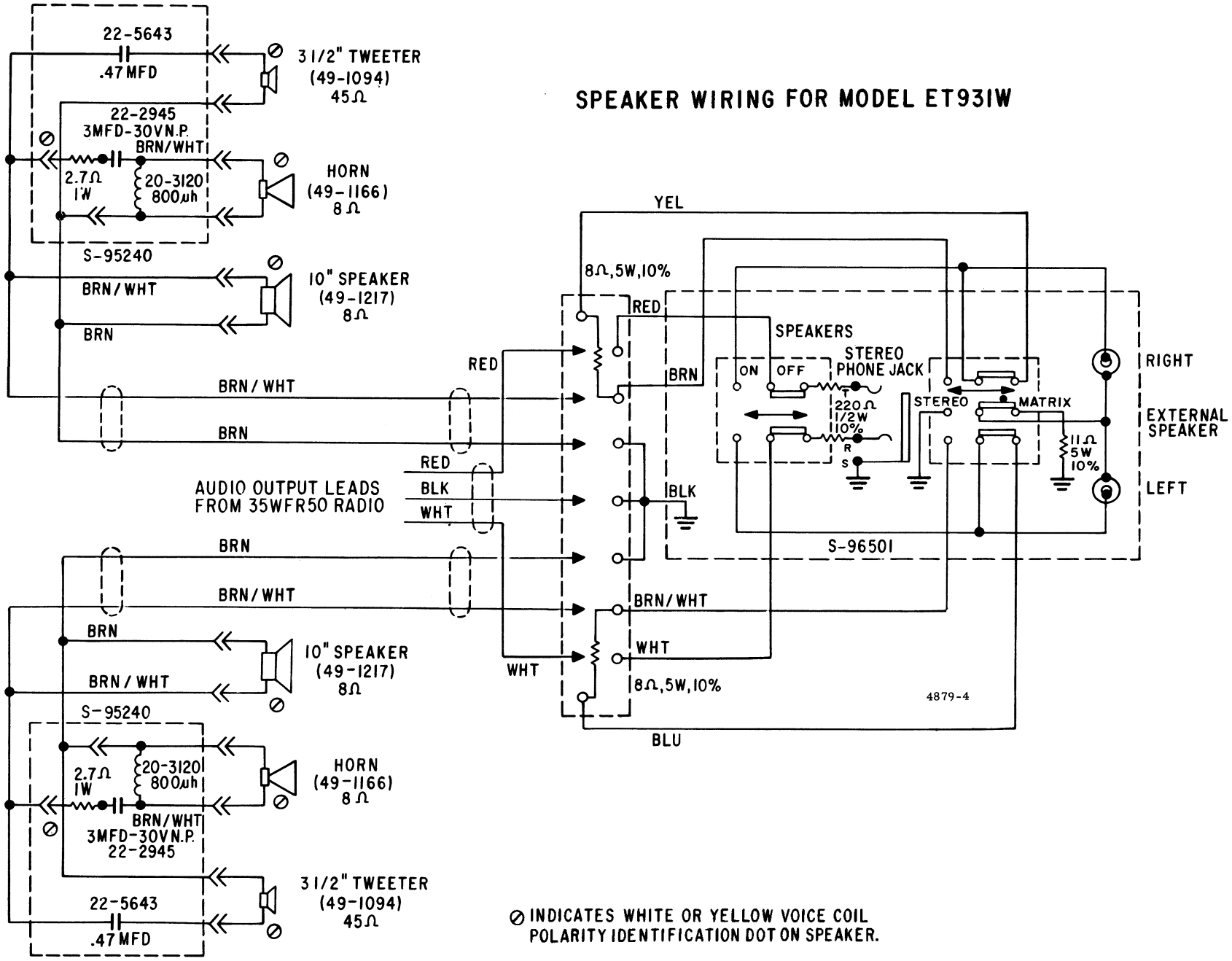

SPEAKER WIRING SCHEMATICS

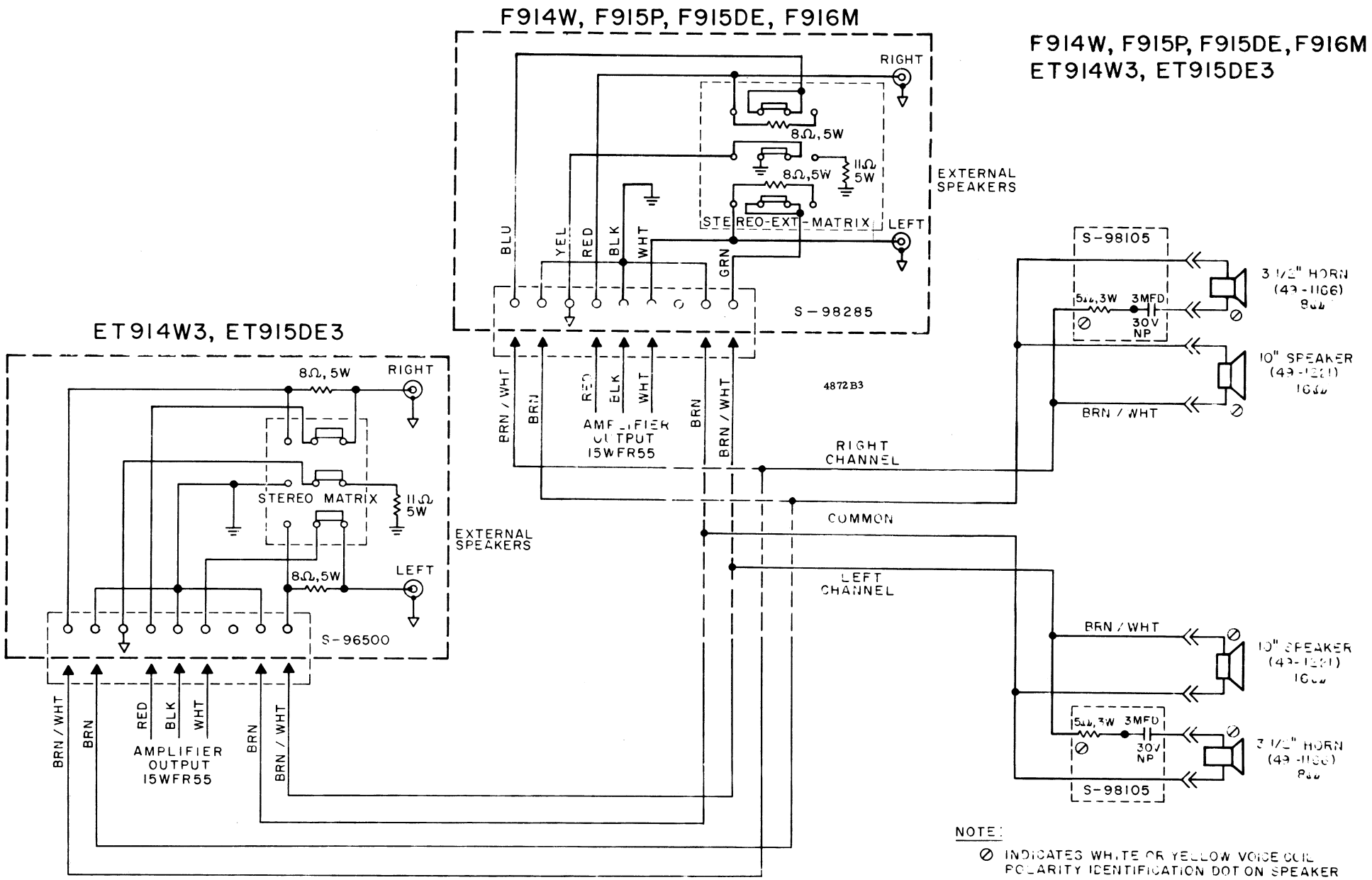

NOTE:

⊘ INDICATES WHITE OR YELLOW VOICE COIL POLARITY IDENTIFICATION DOT ON SPEAKER

SPEAKER WIRING SCHEMATICS

NOTES

REVISIONS

IMPORTANT ANNOUNCEMENT
A NEW LOOK FOR THE "HF" SERIES SERVICE MANUAL SUPPLEMENT

Starting with this supplement, change information will follow the format illustrated below. Each chart heading will list Chassis and/or Model identification and reference to the appropriate Service Manual, such as "Refer to HF30". Change information will normally consist of: schematic reference number (i.e. C304), action taken (omit, add, or alternate useage), part number and description of components, and a partial schematic of the circuit or other appropriate drawing.

CHASSIS 5WFR50
MODELS F902W, W11, W51, F903M, M1, F904DE, P

5WFR50 CHASSIS MODELS

COMPONENT CHANGES			REFER TO HF30
(4864A, 4863B1, B2)			
C304	OMIT	22-6055	2200PF Mica 10% 100V
	ADD	22-5782	2200PF Poly 5% 500V
C306	* * *	22-7191	.0027MF Disc 500V (used with 221-65)
	OR	22-5581	.0039MF Disc 500V (used with 221-79)
IC301	* * *	221-65	Multiplex Demodulator
	OR	221-79	Multiplex Demodulator

DRAWING CHANGES

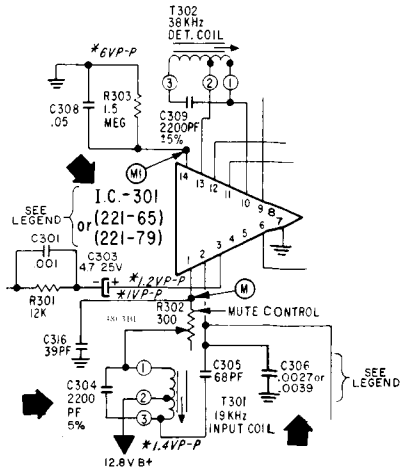

CHASSIS 5WER51
MODELS E584W, W1, E587W, W1, E588W, F587W1

5WER51 CHASSIS MODELS

COMPONENT CHANGES			REFER TO HF30
(4724C, 4717F1, G2)			
C306	OMIT	22-5482	680PF Disc 500V
	ADD	22-7191	.0027MF Disc 500V

DRAWING CHANGES

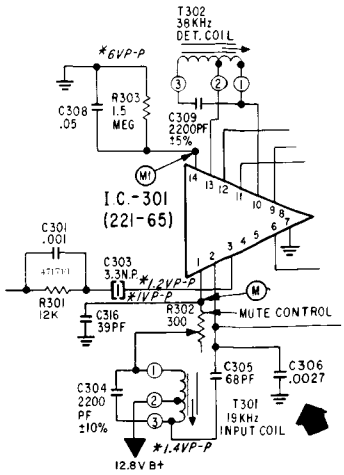

REVISIONS

CHASSIS 5WFR51 — 5WFR51 CHASSIS MODELS
MODELS EX584W, F584W, FV584W, F587W, FV587W, EX588W, F588W, W1, W2

COMPONENT CHANGES			REFER TO HF30
(4724C, 4866B1, B2)			
C304	OMIT	22-6055	2200PF Mica 10% 100V
	ADD	22-5782	2200PF Poly 5% 500V
C306	***	22-7191	.0027MF Disc 500V (used with 221-65)
	OR	22-5581	.0039MF Disc 500V (used with 221-79)
IC301	***	221-65	Multiplex Demodulator
	OR	221-79	Multiplex Demodulator

DRAWING CHANGES

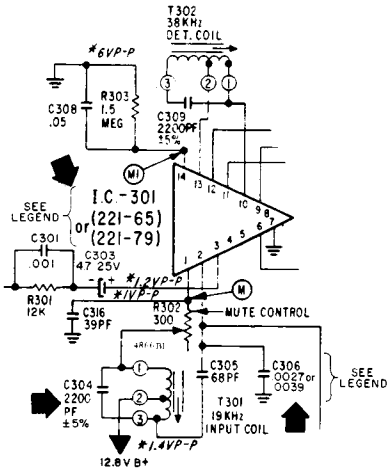

CHASSIS 5WER52, Z1, Z2, Z3 — CHASSIS MODELS
MODELS F712W, W1, W2, FV712W, F736W, W2, W3, W11, FV736W

COMPONENT CHANGES			REFER TO HF30
(4731B3)			
	ADD		Speaker Wiring Schematic for Models F712W1, W2, F736W2, W11
(4769C, 4731F1, F2)			
C303	OMIT	22-13	.0033MF Disc 500V
	ADD	22-7191	.0027MF Disc 500V (5WER52 only)
	OR	22-3034	.05MF Disc 25V (5WER52Z1, Z2, Z3 only)
C305	OMIT	22-6055	2200PF Mica 10% 50V
	ADD	22-5782	2200PF Poly 5% 500V
C315	OMIT	22-6055	2200PF Mica 10% 50V
	ADD	22-5782	2200PF Poly 5% 500V (5WER52Z1, Z2, Z3 only)
IC301	OMIT	221-79	Multiplex Demodulator
	ADD	221-65	Multiplex Demodulator
(4731G2)			
CR504	OMIT	105-269-02	Light Emitting Diode
	ADD	105-253-02	Light Emitting Diode

DRAWING CHANGES

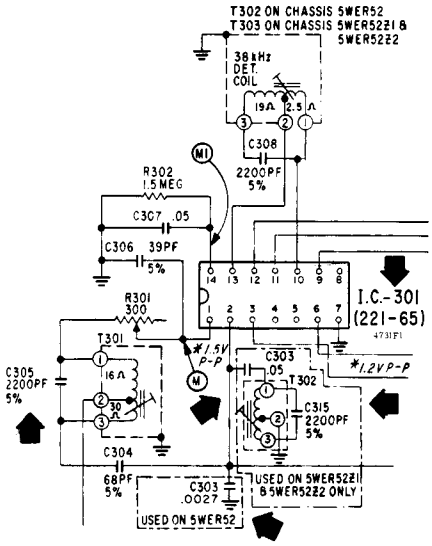

REVISIONS

CHASSIS 5WFR53 MODELS F445W, F680W, F685W — 5WFR53 CHASSIS MODELS

COMPONENT CHANGES			REFER TO HF30
(4720C, 4869B1, B2)			
C304	OMIT	22-6055	220PF Mica 10% 100V
	ADD	22-5782	2200PF Poly 5% 50V
C306	* * *	22-7191	.0027MF Disc 500V (used with 221-65)
	OR	22-5581	.0039MF Disc 500V (used with 221-79)
IC301	* * *	221-65	Multiplex Demodulator
	OR	221-79	Multiplex Demodulator

DRAWING CHANGES

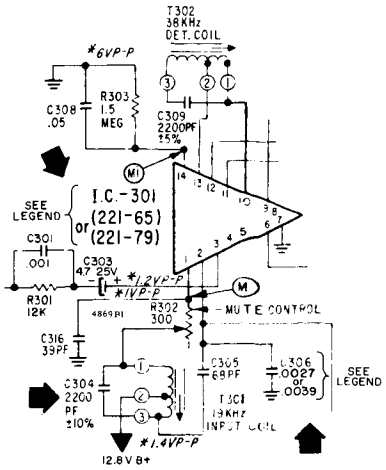

CHASSIS 6AT24 MODELS E966DE, P, F966DE, P, SE2595P, SF2595P, P4 — 6AT24 CHASSIS MODELS

COMPONENT CHANGES			REFER TO HF30
(3995J1, E2)			
C555	OMIT	22-5903	.0015MF Disc 1400V
	ADD	22-7431-05	.0015MF Disc 150 VAC

DRAWING CHANGES

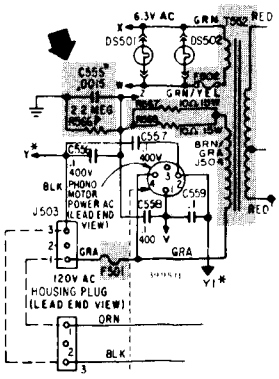

CHASSIS 15WFR51 MODELS F941DE, P, F942M, F946AE, F947P — 15WFR51 CHASSIS MODELS

COMPONENT CHANGES			REFER TO HF30
(4889A)			
IC301	OMIT	221-79	Multiplex Demodulator
	ADD	221-65	Multiplex Demodulator

DRAWING CHANGES

REVISIONS

CHASSIS 15WER55
MODELS E911W, E912M, E913DE, P, P1, ET914W, W1, ET915DE, E921DE, P, E922M

15WER55 CHASSIS MODELS

COMPONENT CHANGES	REFER TO HF30	DRAWING CHANGES
(4637F1)		
NOTE	HF30, Page 119 – Chassis Wiring and Components Viewed from Foil Side – AM Antenna L101 – Terminal "B" should be shown connected by gray lead to junction of C103, R103, R104. Terminal "C" should be shown connected by black lead to Diode CR101.	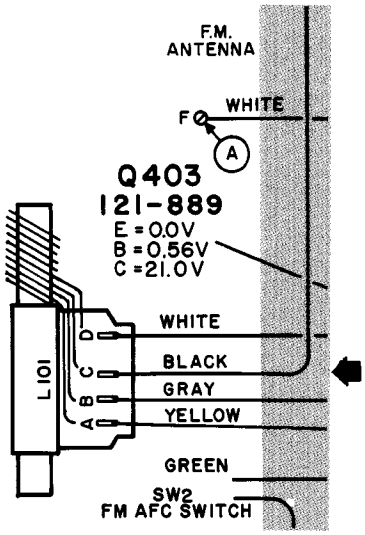

CHASSIS 15WFR55
MODELS ET914W3, ET915DE3, P3, F914W, F915DE, DE1, P, P1, F916M, PN, F8748P, P4, P5, P8

15WFR55 CHASSIS MODELS

COMPONENT CHANGES	REFER TO HF30	DRAWING CHANGES
(4872B1)		
NOTE	HF30, Page 119, Chassis Wiring and Components Viewed from Foil Side – AM Antenna L101 – Terminal "B" should be shown connected by gray lead to junction of C103, R103, R104. Terminal "C" should be shown connected by black lead to Diode CR101.	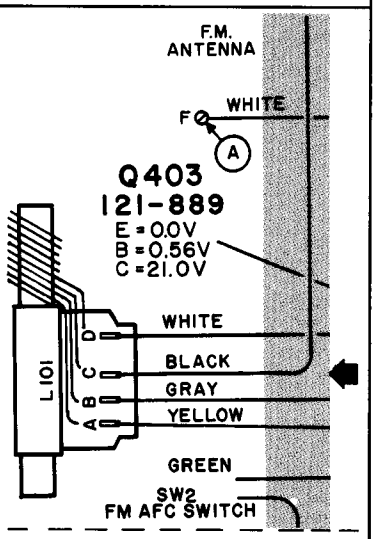

(4872B3)		
ADD	Speaker Wiring Schematic for Models ET914W3, ET915DE3	

REVISIONS

CHASSIS 15WFR55
MODELS ET914W3, ET915DE3, P3, F914W, F915DE, DE1, P, P1, F916M, PN, F8748P, P4, P5, P8

15WFR55 CHASSIS MODELS

COMPONENT CHANGES			REFER TO HF30
(4873A, 4872B1, B2)			
C304	OMIT	22-6055	2200PF Mica 10% 100V
	ADD	22-5782	2200PF Poly 5% 500V
C306	* * *	22-7191	.0027MF Disc 500V (used with 221-65)
	OR	22-5581	.0039MF Disc 500V (used with 221-79)
IC301	* * *	221-65	Multiplex Demodulator
	OR	221-79	Multiplex Demodulator

DRAWING CHANGES

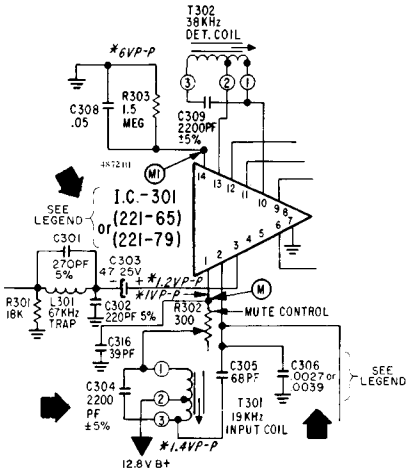

CHASSIS 15WFR57
MODELS F585W, FX585W, F586X, FX586X, F589W, X, F594W

15WFR57 CHASSIS MODELS

COMPONENT CHANGE			REFER TO HF30
(4877A, 4875A1, A2)			
C304	OMIT	22-6055	2200PF Mica 10% 100V
	ADD	22-5782	2200PF Poly 5% 500V
C306	* * *	22-7191	.0027MF Disc 500V (used with 221-65)
	OR	22-5581	.0039MF Disc 500V (used with 221-79)
IC301	* * *	221-65	Multiplex Demodulator
	OR	221-79	Multiplex Demodulator

DRAWING CHANGES

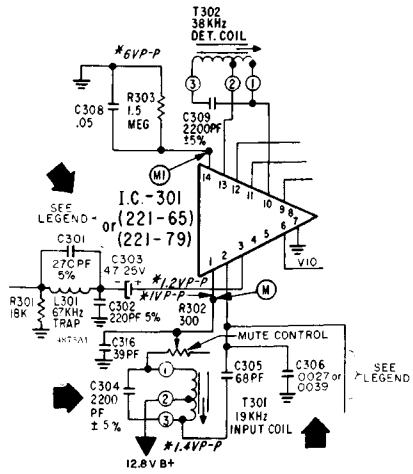

(4875B1, B2)

R10	OMIT	63-4133	56 OHM 10% 1/4W
	ADD	63-4140	82 OHM 10% 1/4W

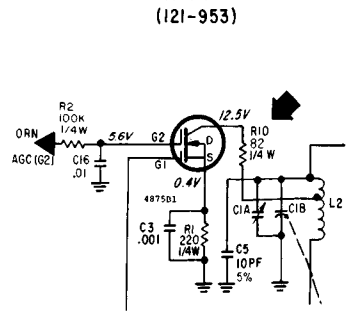

REVISIONS

CHASSIS 36WFR50 — 35WFR50 CHASSIS
MODELS ET931W, F923W, FR923W, F924M, FR924M, F925DE, P, FR925DE, P, FR936AE, FR937P — MODELS

COMPONENT CHANGES		REFER TO HF30	DRAWING CHANGES

(4879-4)

ADD — Speaker Wiring Schematic for Model ET931W

(4879B1, B2)

C227	OMIT	22-3034	.05 MF Disc 25V	
R10	OMIT	63-4133	56 OHM 10% 1/4W	
	ADD	63-4140	82 OHM 10% 1/4W	
R402	OMIT	63-1883	220K 10%	1/2W
	ADD	63-1862	68K 10%	1/2W
R431	OMIT	63-1842	22K 20%	1/2W
	ADD	63-1862	68K 10%	1/2W
R433	OMIT	63-1933	3.3M 20%	1/2W
R452	OMIT	63-1883	220K 10%	1/2W
	ADD	63-1862	68K 10%	1/2W
R501	* * *	Connection relocated.		
	* * *	Alternate view of Four Channel Connector Jacks.		

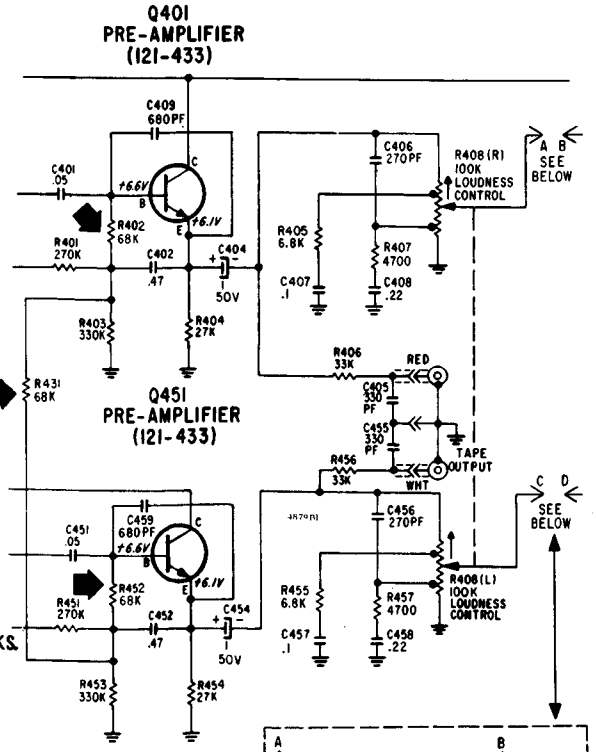

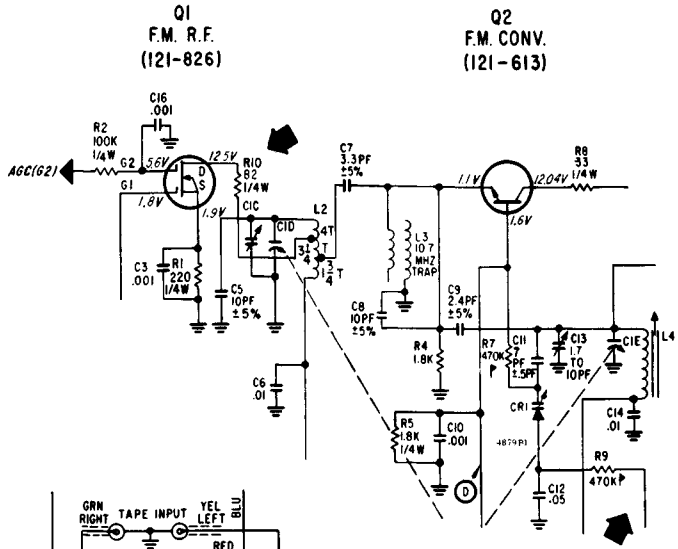

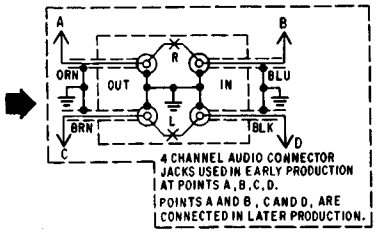

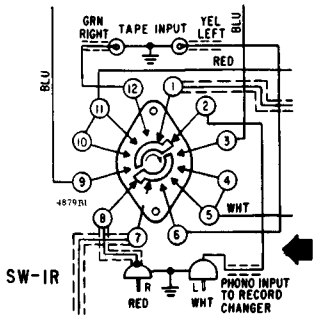

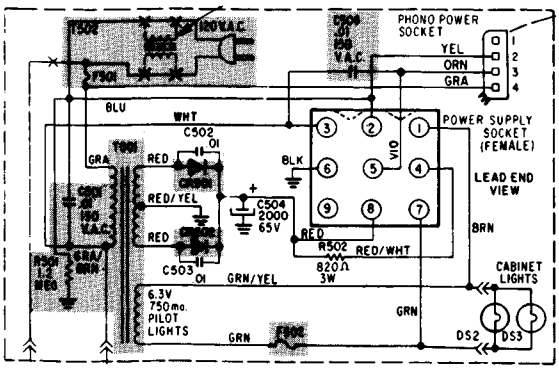

REVISIONS

CHASSIS 35WFR50 MODELS ET931W, F923W, FR923W, F924M, FR924M, F925DE, P, FR925DE, P, FR936AE, FR937P

35WFR50 CHASSIS MODELS

COMPONENT CHANGES			REFER TO HF30	DRAWING CHANGES
(4879C1, C2)				
R235	OMIT	63-1852	39K 20% 1/2W	
	ADD	63-1862	68K 10% 1/2W	

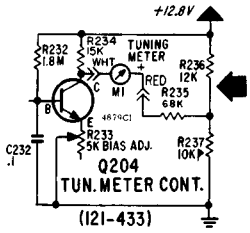

NOTE — HF30, Page 7 – Shows the 45RPM Adaptor for Models F923W thru FR925P as S-72910. The correct Part Number should be S-82964.

MODEL E9026W

E9026W MODEL

COMPONENT CHANGES	REFER TO HF30	DRAWING CHANGES
NOTE	HF30, Page 9 – Shows Stylus as S-82521. This Part Number should read S-82621.	

E9026W

REPRESENTATIVE MODEL ILLUSTRATION

F 445 W

F 585W

F589W

F 680 W

F 685 W

REPRESENTATIVE MODEL ILLUSTRATION

F904 DE/P

F736W

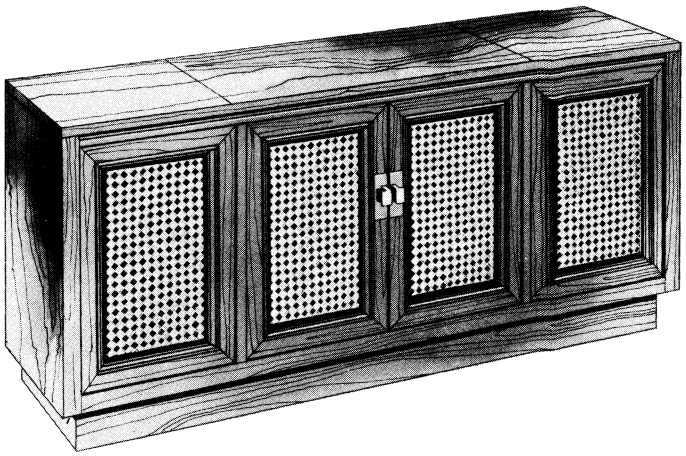

F923 W

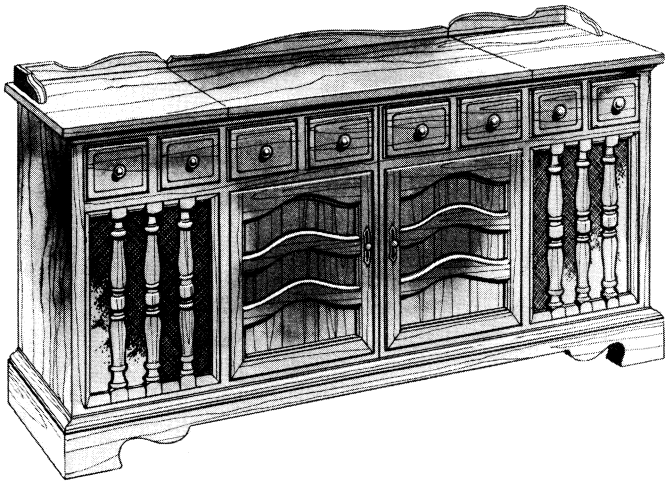

F924 M

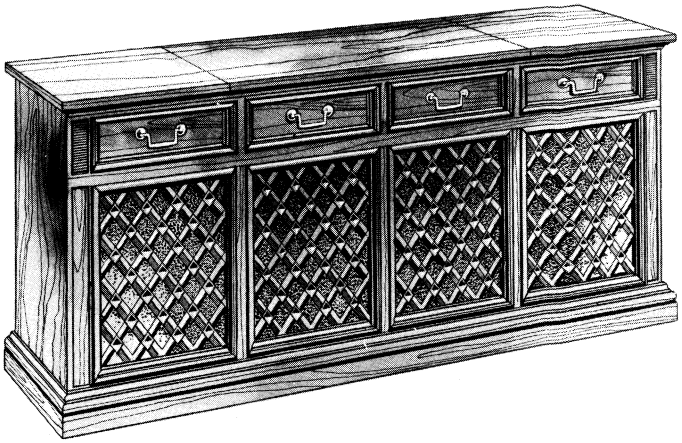

F925 DE

REPRESENTATIVE MODEL ILLUSTRATION